SPARE PARTS EXPLODED VIEW
GAS-WALL CONDENSING BOILERS

Model

TFTN 500-850.

R8219101-02 - 06/09/2024

TFTN500-850

Gas-wall condensing boilers

Col	Reference	Model type	Begin	End
1	3260165	TFTN500.	07-2023	-
2	3260166	TFTN600.	07-2023	-
3	3260167	TFTN725.	07-2023	-
4	3260168	TFTN850.	07-2023	-

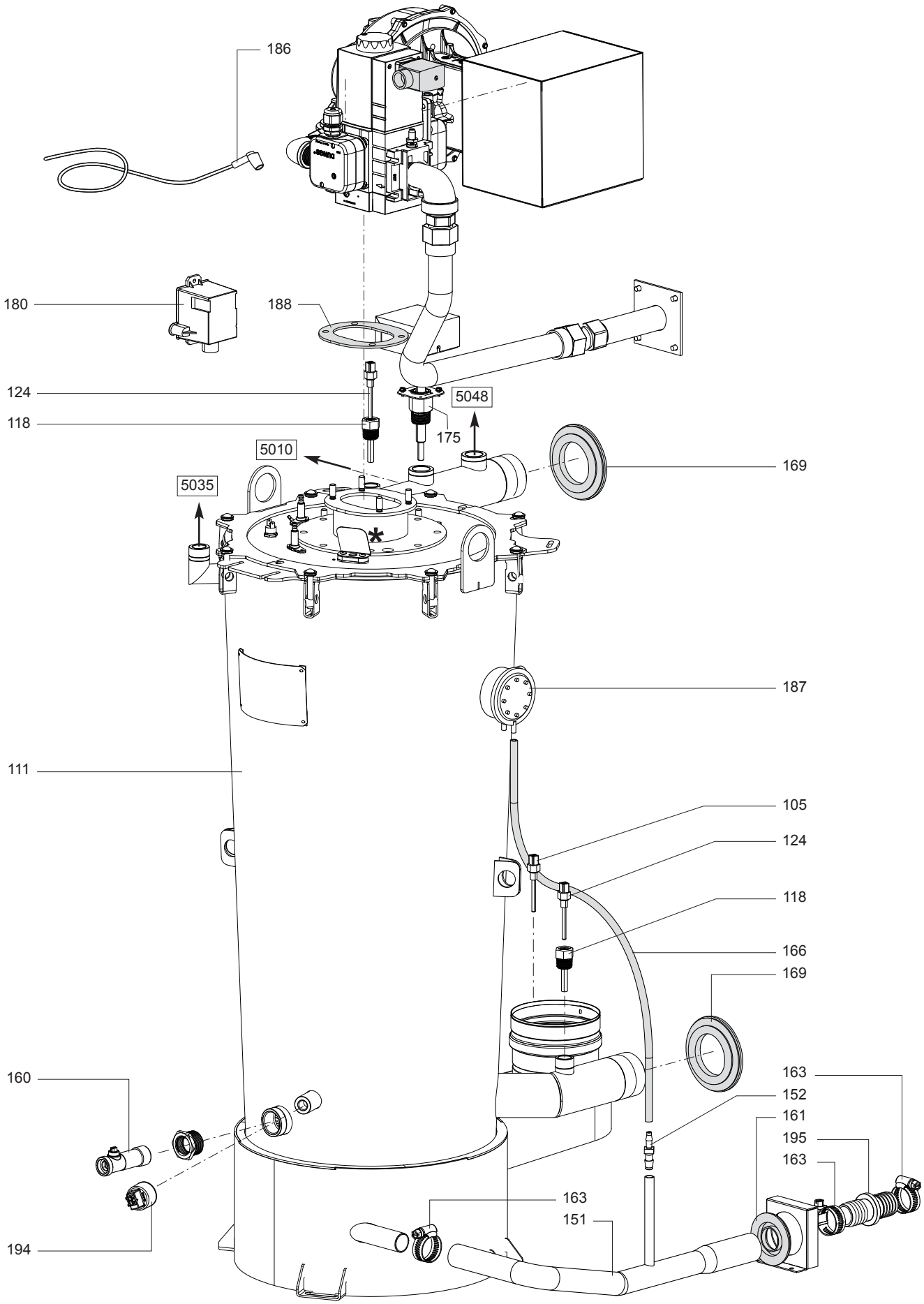
186
180
188
124
118
5048
175
5010
169
5035
187
111
105
124
118
166
169
160
163
152
161
195
163
163
151
194

	Description	Manf. Pt. N	Type	TFTN500.	TFTN600.	TFTN725.	TFTN850.	5	6	7	8	9	10	11	12	13	14	15	16	17	18	From	to
0100	EXCHANGER																						
0105	NTC FLUE SENSOR 4X45 1/4 10K3 SS	64980174		●	●	●	●																
0111	HEAT EXCHANGER ASSEMBLY, 500-600 mBTU	64980828		●	●																		
	HEAT EXCHANGER ASSEMBLY, 725 mBTU	64980802				●																	
	HEAT EXCHANGER ASSEMBLY, 850 mBTU	64980805					●																
0118	SENSOR THERMOWELL, FULL SS AISI 316L	6000085314		●	●	●	●																
0123	AUTO AIR VENT, 1/2" NPT	64980459		●	●	●	●																
0124	SENSOR DUPLEX 2X10KOHM NTC ¼"BSP	6008531501		●	●	●	●																
0151	CONDENSATE TUBE	64980766		●	●	●	●																
0152	CONNECTOR TUBING 3/8 in x 1/4 in, barbed	64980244		●	●	●	●																
0160	DRAIN VALVE	64980748		●	●	●	●																
0161	GROMMET	64980635		●	●	●	●																
0163	HOSE CLAMP 11-16-1 1-2	6000083718		●	●	●	●																
0166	APS TUBE	64980643		●	●	●																	
0169	GROMMET	64980764		●	●																		
	GROMMET	64980803				●	●																
0175	LWCO KIT, FTG	6008636201		●	●	●	●																
0180	SPARK GENERATOR	64980469		●	●	●	●																
0186	CABLE (IGNITION ELECTRODE)	64980470		●	●	●	●																
0187	AIR PRESSURE SWITCH	65118678		●	●	●	●																
0188	GASKET (FAN)	6500811700		●	●	●																	
	GASKET (FAN)	6500811800					●																
0194	WATER PRESSURE SENSOR	64980500		●	●	●	●																
0195	BARB FITTING	64980767		●	●	●	●																

200

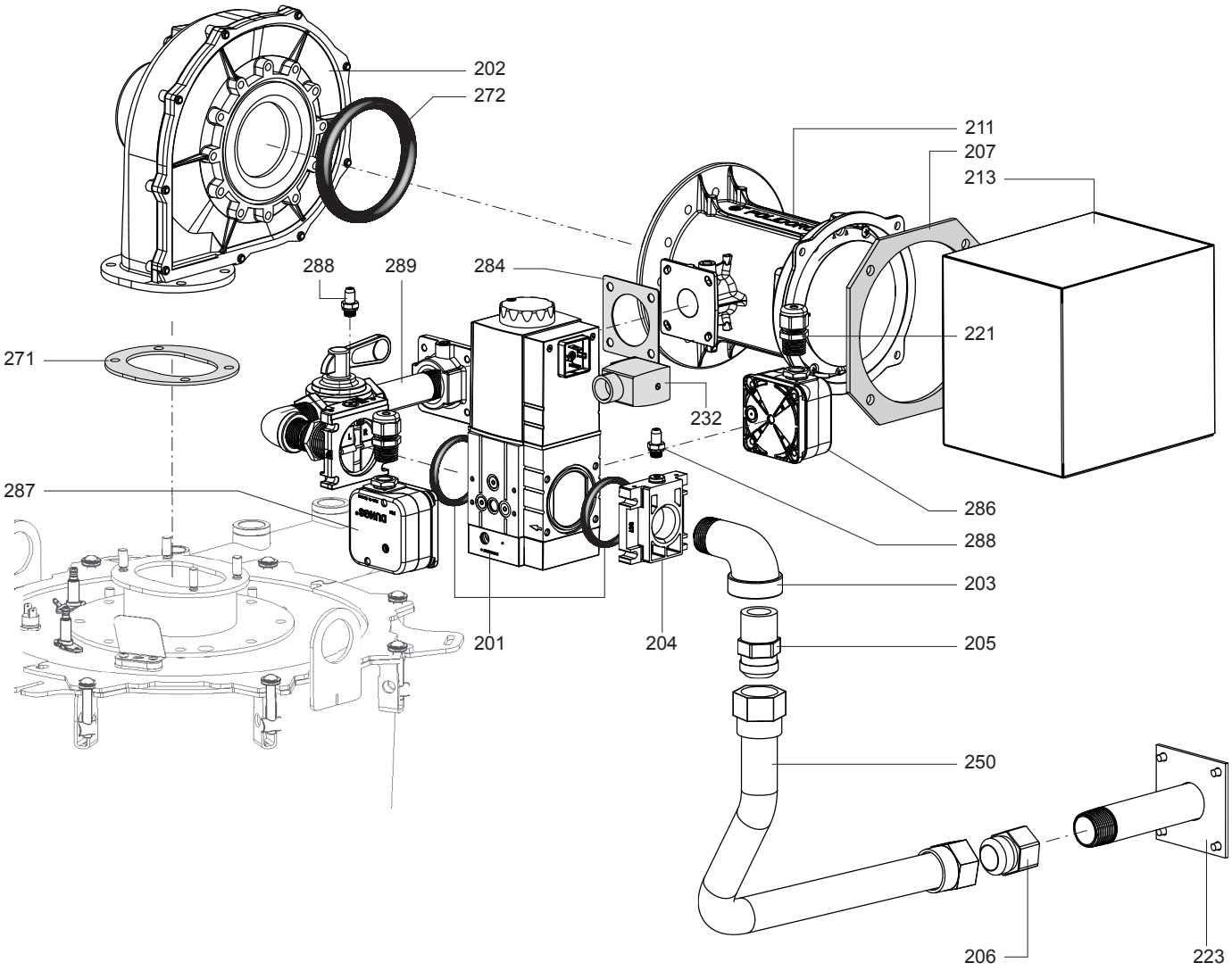
202
272
211
207
213
288
289
284
221
271
232
287
286
288
203
201
204
205
250
206
223

300

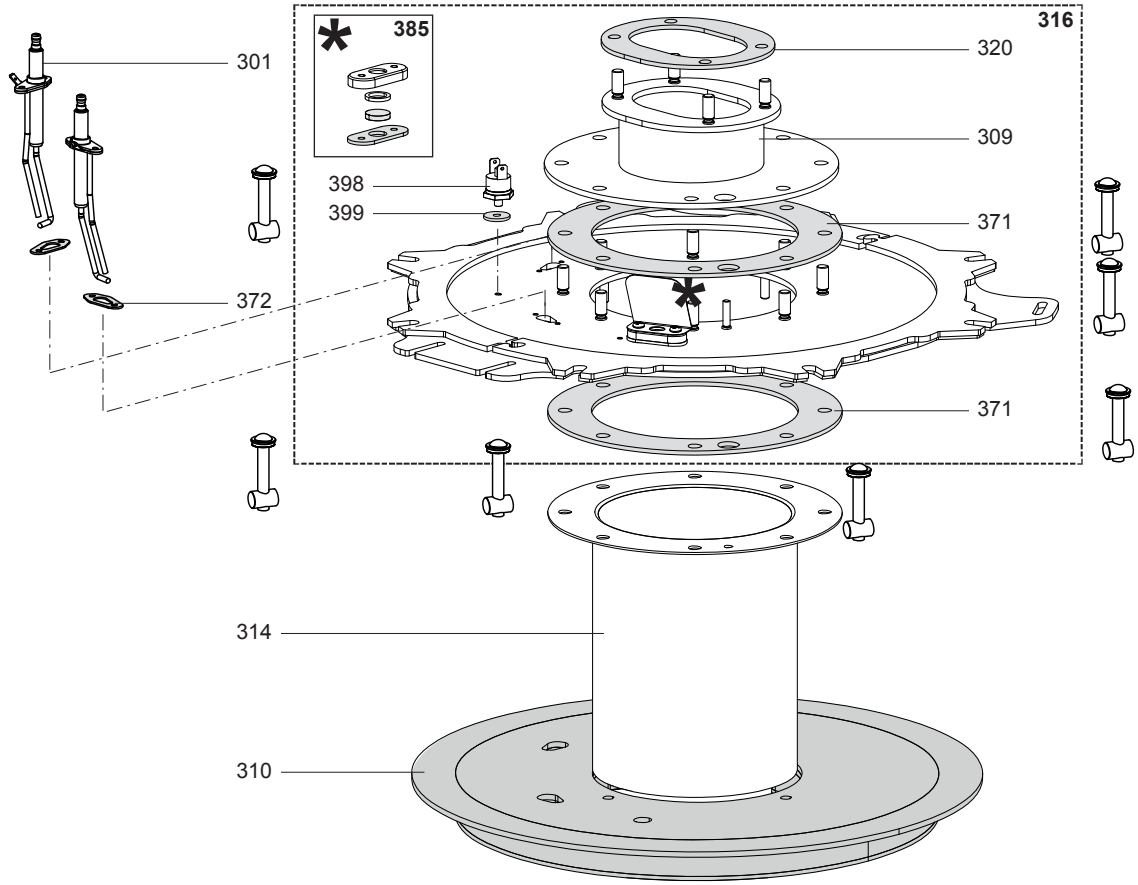
385
316
301
320
309
398
399
371
372
371
314
310

	Description	Manf. Pt. N	Type	TFTN500.	TFTN600.	TFTN725.	TFTN850.	5	6	7	8	9	10	11	12	13	14	15	16	17	18	From	to
				1	2	3	4																
0200	GAS SECTION																						
0201	GAS VALVE, 500-850mBTU	64980752		●	●	●	●																
0202	FAN EBM PGT500-600-725	64980749		●	●	●																	
	FAN Nautilair 8.9 120VAC	6500812800					●																
0203	ELBOW (GAS SUPPLY LINE)	64980754		●	●																		
	ELBOW (GAS SUPPLY LINE)	64980826				●	●																
0204	FLANGE (GAS VALVE INLET)	64980755		●	●																		
	FLANGE (GAS VALVE INLET)	64980796				●	●																
0205	MNPT X FLARE ADAPTER (GAS SUPPLY LINE)	64980757		●	●																		
	MNPT X FLARE ADAPTER (GAS SUPPLY LINE)	64980799				●	●																
0206	FNPT X FLARE ADAPTER (GAS SUPPLY LINE)	64980758		●	●																		
	FNPT X FLARE ADAPTER (GAS SUPPLY LINE)	64980797				●	●																
0207	GASKET (SILENCER-VENTURI)	64980768		●	●	●	●																
0211	LP CONVERSION KIT, 500-600 mBTU	64980743		●	●																		
	LP CONVERSION KIT, 725-850 mBTU	64980801				●	●																
	VENTURI NG, 500-600 mBTU	64980750		●	●																		
	VENTURI NG, 725-850 mBTU	64980795				●	●																
0213	SILENCER ASSEMBLY	64980763		●	●	●	●																
0221	CONDUIT CONNECTOR	64980822		●	●	●	●																
0223	GAS INLET ADAPTER	64980760		●	●																		
	GAS INLET ADAPTER	64980823				●	●																
0232	CABLE SOCKET	64980821		●	●	●	●																
0250	FLEX PIPE (GAS SUPPLY LINE)	64980756		●	●																		
	FLEX PIPE (GAS SUPPLY LINE)	64980794				●	●																
0271	GASKET (FAN)	6500811700		●	●	●																	
	GASKET (FAN)	6500811800					●																
0272	O-RING (BLOWER INLET)	6000084084		●	●	●	●																
0284	GASKET, GAS INLET FLANGE	6000084087		●	●	●	●																
0286	HIGH GAS PRESSURE SWITCH	6500802100		●	●	●	●																
0287	Gas Pressure Switch (LOW)	64980745		●	●	●	●																
0288	BLEED SCREW (GAS VALVE FLANGE)	64980781		●	●	●	●																
0289	GAS LINE ASS'Y (GV/MIXER) 500-600 mBTU	64980759		●	●																		
	GAS LINE ASS'Y (GV/MIXER) 725-850 mBTU	64980792				●	●																
0300	BURNER HEAD																						
0301	ELECTRODE (IGNITION)	64980747		●	●	●	●																
0309	FAN PLATE, 500-600mBTU	64980789		●	●																		
	FAN PLATE, 725 mBTU	64980810				●																	
	FAN PLATE, 850 mBTU	64980808					●																
0310	PIONEER REFRACTORY. PGT550	6500645300		●	●																		
	PIONEER REFRACTORY. PGT700-850	6500645400				●	●																
0314	BURNER	6500809300		●	●																		
	BURNER, 725-850 mBTU	6500806100				●	●																
0316	BURNER TOP PLATE, 500-600 mBTU	64980783		●	●																		
	BURNER TOP PLATE, 725-850 mBTU	64980806				●	●																
0320	GASKET (FAN)	6500811700		●	●	●																	
	GASKET (FAN)	6500811800					●																
0371	GASKET (BURNER), 500-850 mBTU	6000087534		●	●	●	●																
0372	GASKET (ELECTRODE)	64980223		●	●	●	●																
0385	SIGHT GLASS ASSMBLY	6000085641		●	●	●	●																
0398	THERMAL SWITCH, TOP PLATE	64980506		●	●	●	●																
0399	GASKET, THERMAL SWITCH TO TOP PLATE	64980507		●	●	●	●																

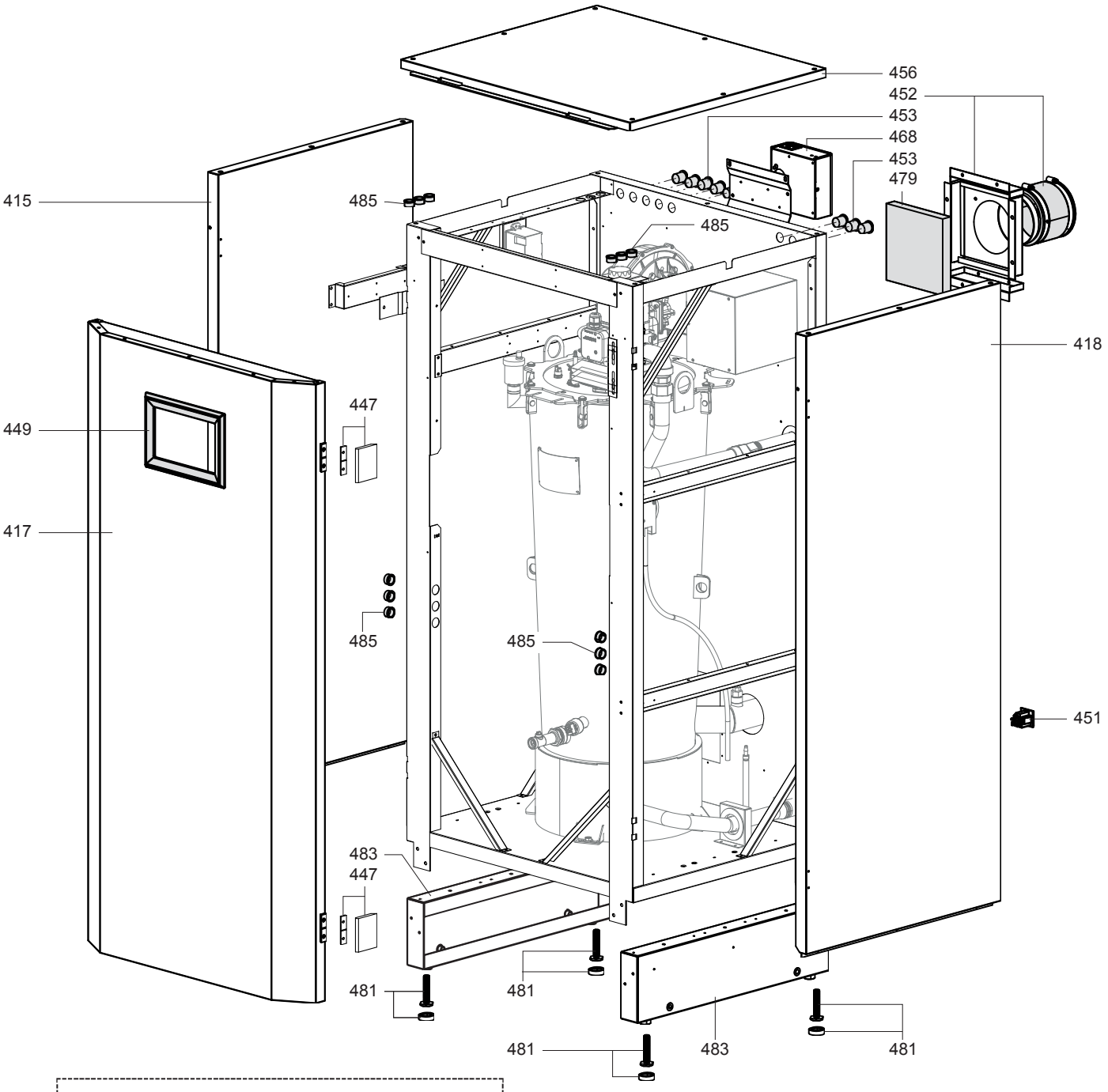
456
452
453
468
453
479
415
485
485
418
447
449
417
485
485
451
483
447
481
481
481
483
481

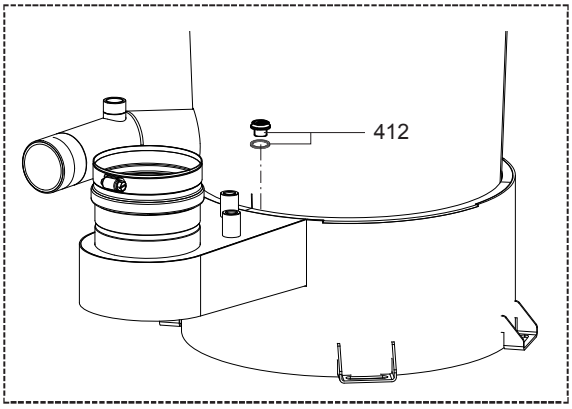
412

	Description	Manf. Pt. N	Type	TFTN500.	TFTN600.	TFTN725.	TFTN850.	5	6	7	8	9	10	11	12	13	14	15	16	17	18	From	to
0400	FRONT CASE																						
0412	FLUE TEST PORT	64980753		●	●	●	●																
0415	PANEL, LEFT SIDE All TFTN	64980778		●	●	●	●																
0417	CASE PANEL (FRONT) TFTN500-800	64980762		●	●	●	●																
0418	PANEL, RIGHT SIDE, All TFTN	64980777		●	●	●	●																
0447	DOOR LATCH	6000087500		●	●	●	●																
0449	HMI BEZEL	64980505		●	●	●	●																
0451	RECEPTACLE, 120VAC	6000084423		●	●	●	●																
0452	AIR INLET ASSEMBLY	64980775		●	●	●	●																
0453	PLUG, 7/8 in BLACK DOME	6000084095		●	●	●	●																
0456	TOP PANEL	64980776		●	●	●	●																
0468	LWCO KIT, FTG	6008636201		●	●	●	●																
0479	AIR FILTER	64980751		●	●	●	●																
0481	LEG LEVELER	6000085355		●	●	●	●																
0483	LEG	64980786		●	●	●	●																
0485	GROMMET	64980761		●	●	●	●																

800

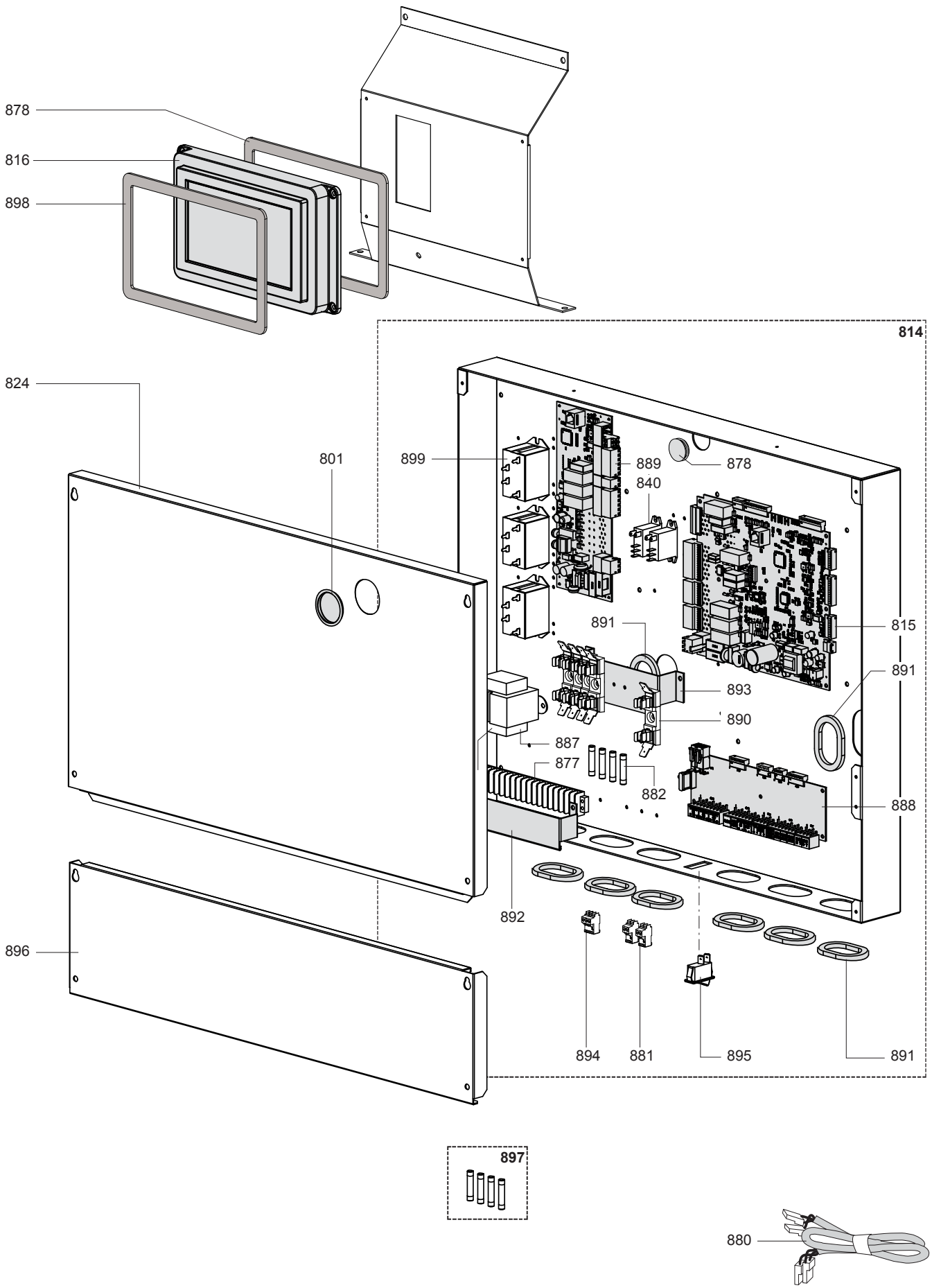

R8227693

	Description	Manf. Pt. N	Type	TFTN500. TFTN600. TFTN725. TFTN850.																		31	
				1	2	3	4	5	6	7	8	9	10	11	12	13	14	15	16	17	18	From	to
0800	ELECTRICAL BOX																						
0801	PLUG, CONTROL PANEL COVER	64980504		●	●	●	●																
0814	CONTROL PANEL (WITH HARNESS AND PCBS)	64980769		●	●	●	●																
0815	MAIN PCB, ACP CONTROLLER ACP	64980825		●	●	●	●																
0816	HMI, TFTN TOUCHSCREEN 7 in	64980468		●	●	●	●																
0824	COVER, CONTROL PANEL	64980770		●	●	●	●																
0840	RELAY, GAS VALVE	64980791		●	●	●	●																
0877	BARRIER, HIGH VOLT FIELD CONNECTION	64980536		●	●	●	●																
0878	GASKET, HMI AME	6500591700		●	●	●	●																
	GROMMET 1 in	64980267		●	●	●	●																
0880	WIRING, AUX1 PUMP	64980725		●	●	●	●																
	WIRING, AUX2 PUMP	64980726		●	●	●	●																
	WIRING, AUX2 PUMP/TRANSFOR.	64980727		●	●	●	●																
	WIRING, BLWR/VAR PUMP CTRL	64980728		●	●	●	●																
	WIRING, DHW PUMP	64980729		●	●	●	●																
	WIRING, EBUS, FIELD SENSORS	64980730		●	●	●	●																
	WIRING, FLAME SENSOR	64980731		●	●	●	●																
	WIRING, GAS VALVE	64980724		●	●	●	●																
	WIRING, GAS-IGNITER-LWCO	64980732		●	●	●	●																
	WIRING, GND	64980733		●	●	●	●																
	WIRING, HMI	64980734		●	●	●	●																
	WIRING, POWER SUPPLY	64980735		●	●	●	●																
	WIRING, WI-FI	64980736		●	●	●	●																
	WIRING, WPS, APS, TEMP/SW	64980737		●	●	●	●																
	WIRING, ZONE OUTPUTS	64980738		●	●	●	●																
	WIRING, ZONE SUPPLY	64980739		●	●	●	●																
0881	CONNECTOR 2P	65111933		●	●	●	●																
0882	FUSE, 2A, 32V, PLUG STYLE	64980476		●	●	●	●																
	FUSE, 2A, ZONE CONTROLLER, C3Z	64980480		●	●	●	●																
	FUSE, 5A, ZONE PUMPS	64980478		●	●	●	●																
	FUSE, 6.3A, MAIN PCB, ACP	64980479		●	●	●	●																
0887	TRANSFORMER 24V, 40VA	64980471		●	●	●	●																
0888	PCB, LOW VOLTAGE CONNECTION	64980475		●	●	●	●																
0889	PCB, 3-ZONE CONTROLLER	6500801400		●	●	●	●																
0890	FUSES HOLDER	64980477		●	●	●	●																
0891	WIRING GROMMET (45 mm)	64980526		●	●	●	●																
0892	COVER, HIGH VOLTAGE BARRIER	64980723		●	●	●	●																
0893	BRACKET, FUSE HOLDER	64980525		●	●	●	●																
0894	CONNECTOR 3P (x5)	65111934-01		●	●	●	●																
0895	ROCKER SWITCH 20A @125VAC, E- SWITCH	6000085970		●	●	●	●																
0896	COVER, FIELD WIRING	64980784		●	●	●	●																
0897	SPARE FUSE KIT (2 EACH)	64980527		●	●	●	●																
0898	GASKET, HMI TO FRONT COVER	64980503		●	●	●	●																
0899	RELAY, PUMP, OMRON, ISOLATION 30A 120VAC	6000087558		●	●	●	●																

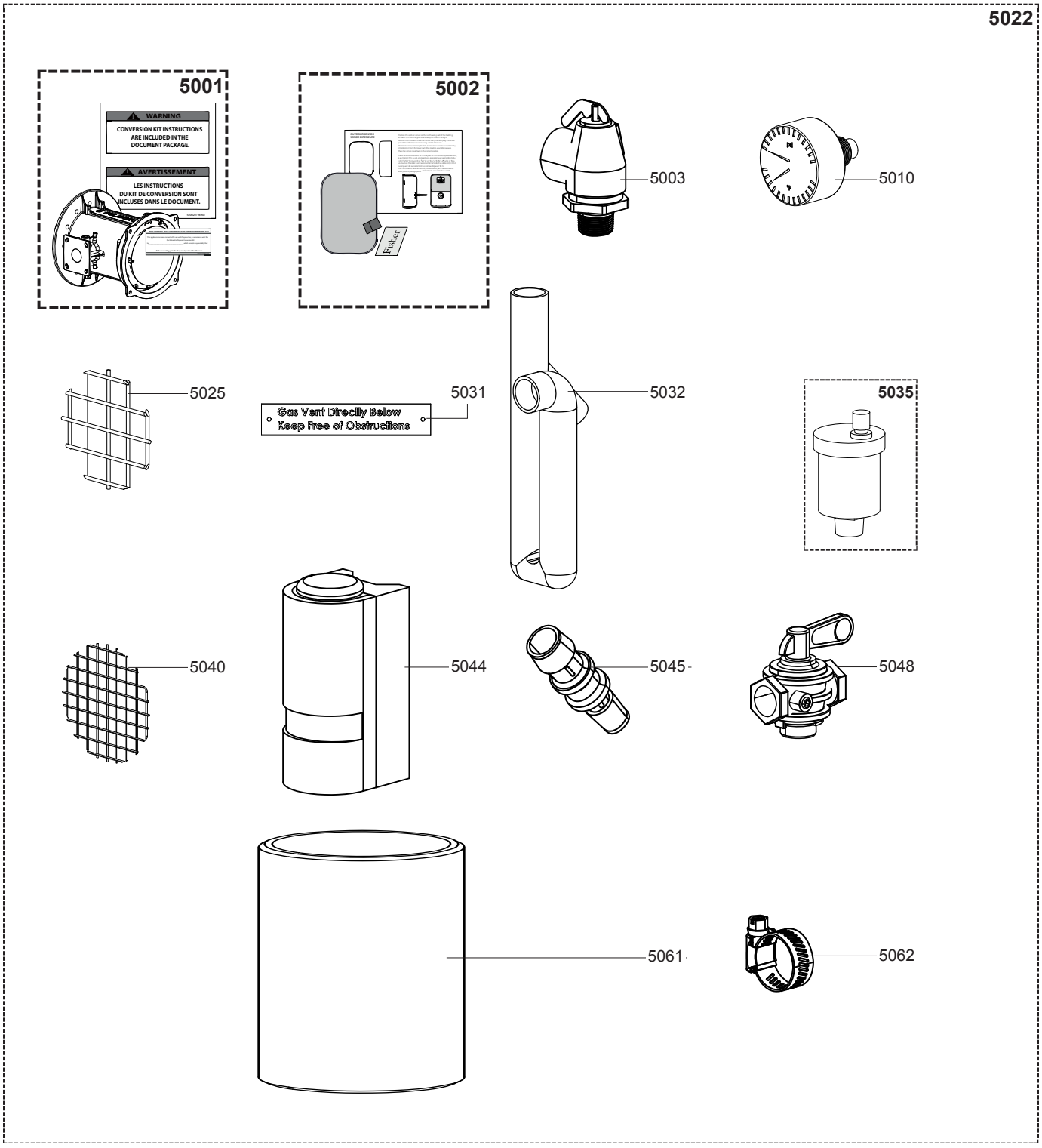
5022
5001
WARNING
CONVERSION KIT INSTRUCTIONS ARE INCLUDED IN THE DOCUMENT PACKAGE.
AVERTISSEMENT
LES INSTRUCTIONS DU KIT DE CONVERSION SONT INCLUSES DANS LE DOCUMENT.
5002
Filter
5003
5010
5025
5031
Gas Vent Directly Below
Keep Free of Obstructions
5032
5035
5040
5044
5045
5048
5061
5062

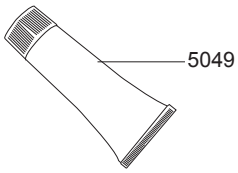
5049

	Description	Manf. Pt. N	Type	TFTN500.	TFTN600.	TFTN725.	TFTN850.	5	6	7	8	9	10	11	12	13	14	15	16	17	18	From	to
5000	JIG PLATE & PIPE FITTING																						
5001	LP CONVERSION KIT, 500-600 mBTU	64980743		●	●																		
	LP CONVERSION KIT, 725-850 mBTU	64980801				●	●																
5002	OUTDOOR SENSOR	64980218		●	●	●	●																
5003	RELIEF VALVE3-4M X1FM,50 PSI	6000084088		●	●	●	●																
5010	TRIDICATOR 80PSI, 250F, TRX-FTX	6000086804		●	●	●	●																
5022	INSTALLATION KIT BOX	64980798				●	●																
	INSTALLATION KIT BOX, TFTN500-600	64980740		●	●																		
5025	ROUND MESH, VENT SCREEN (3.375 in)	64980212		●	●																		
	VENT SCREEN, 6.5 STAINLESS STEEL MESH	6000086234				●	●																
5031	DECAL, GAS VENT DIRECTLY BELOW	6000083008		●	●	●	●																
5032	CONDENSATE DRAIN TUBE	64980742		●	●	●	●																
5040	VENT SCREEN, 4.375 STAINLESS STEEL MESH	6000086233		●	●	●	●																
5044	SENSOR, SYSTEM PIPE SENSOR	6000084010		●	●	●	●																
5045	CONNECTOR TUBING	64980741		●	●	●	●																
5048	MANUAL SHUTOFF VALVE FTG1.2-1.4 IN.	6000085312				●	●																
	MANUAL SHUTOFF VALVE, 1" F NPT	6000084025		●	●																		
5049	THERMAL COMPOUND TASSERON 10PK	6000085316		●	●	●	●																
5061	4" CPVC	64980744		●	●																		
	6" CPVC	64980800				●	●																
5062	HOSE CLAMP 11-16-1 1-2	6000083718		●	●	●	●																

	6XXXXXXX	EN FR	DE ES	NL IT	X
0105	64980174	NTC FLUE SENSOR 4X45 1/4 10K3 SS CAPTEUR NTC 4X45 1/4 10K3 SS	NTC SENSOR 4X45 1/4 10K3 SS NTC SENSOR 4X45 1/4 10K3 SS	NTC SENSOR 4X45 1/4 10K3 SS SENSORE NTC 4X45 1/4 10K3 SS	0
0111	64980802	HEAT EXCHANGER ASSEMBLY. ÉCHANGEUR DE CHALEUR	WÄRMETAUSCHER INTERCAMBIADOR DE CALOR	WARMTEWISSELAAR SCAMBIATORE	0
	64980805	HEAT EXCHANGER ASSEMBLY. ÉCHANGEUR DE CHALEUR	WÄRMETAUSCHER INTERCAMBIADOR DE CALOR	WARMTEWISSELAAR SCAMBIATORE	0
	64980828	HEAT EXCHANG.ASSEMBLY. ÉCHANGEUR DE CHALEUR	WÄRMETAUSCHER INTERCAMBIADOR DE CALOR	WARMTEWISSELAAR SCAMBIATORE	0
0118	6000085314	SENSOR THERMOW., FULL SS AISI 316L SENSOR THERMOW., FULL SS AISI 316L	SENSOR THERMOW., FULL SS AISI 316L SENSOR THERMOW., FULL SS AISI 316L	SENSOR THERMOWELL, FULL SS AISI 316L SENSOR THERMOWELL, FULL SS AISI 316L	0
0123	64980459	AUTO AIR VENT, 1/2" NPT SOUPAPE DE VENTILATION 1/2 in NPT	ENTLÜFTUNGSVENTIL 1/2 in NPT VÁLV.VENTIL.DE AIRE AUTOM.1/2 in NPT	VENTILATORKLEP 1/2 in NPT VALVOLA SFIATO ARIA 1/2 in NPT	0
0124	6008531501	SENSOR DUPLEX 2X10KOHM NTC ¼"BSP SENSOR DUPLEX 2X10KOHM NTC ¼"BSP	SENSOR DUPLEX 2X10KOHM NTC ¼"BSP SENSOR DUPLEX 2X10KOHM NTC ¼"BSP	SENSOR DUPLEX 2X10KOHM NTC ¼"BSP SENSOR DUPLEX 2X10KOHM NTC ¼"BSP	0
0151	64980766	CONDENSATE TUBE TUBE CONDENSAT	KONDENSATROHR TUBO DE CONDENSADO	CONDENSBUIS TUBO CONDENSA	0
0152	64980244	CONNECTOR TUBING 3/8 in x 1/4 in, barbed TUBE DE CONNECTEUR 3/8 in x 1/4 in	ANSCHLUSSROHR 3/8 in x 1/4 in CONECTOR TUBERÍA 3/8 in x 1/4 in	CONNECTORBUIS 3/8 in x 1/4 in CONNETTORE TUBI 3/8 in x 1/4 in	0
0160	64980748	DRAIN VALVE VANNE DE VIDANGE	ABFLUSSVENTIL VÁLVULA DE DRENAJE	AFVOERKLEP VALVOLA DI SCARICO	1
0161	64980635	GROMMET PASSE-FIL	TÜLLE OJAL	DOORVOER GOMMINO	0
0163	6000083718	HOSE CLAMP 11-16-1 1-2 HOSE CLAMP 11-16-1 1-2	HOSE CLAMP 11-16-1 1-2 HOSE CLAMP 11-16-1 1-2	HOSE CLAMP 11-16-1 1-2 HOSE CLAMP 11-16-1 1-2	0
0166	64980643	APS TUBE TUBE APS	APS-ROHR TUBO APS	APS BUIS TUBO APS	0
0169	64980764	GROMMET PASSE-FIL	TÜLLE OJAL	DOORVOER GOMMINO	0
	64980803	GROMMET PASSE-FIL	TÜLLE OJAL	DOORVOER GOMMINO	0
0175	6008636201	LWCO KIT, FTG LWCO KIT, FTG	LWCO KIT, FTG LWCO KIT, FTG	LWCO KIT, FTG LWCO KIT, FTG	0
0180	64980469	SPARK GENERATOR TRANSFORMATEUR D'ALLUMAGE	ZÜNDTRAFO TRANSFORMADOR DE ENCENDIDO	ONTSTEKING TRANSFORMATOR ACCENDITORE	0
0186	64980470	CABLE (IGNITION ELECTRODE) CÂBLE (ÉLECTRODE D'ALLUMAGE)	KABEL (ZÜNDELEKTRODE) CABLE (ELECTRODO DE ENCENDIDO)	KABEL (ONTSTEKINGSELEKTRODE) CAVO ELETTRODO ACC.	0
0187	65118678	AIR PRESSURE SWITCH PRESSOSTAT AIR	LUFTWACHTER PRESOSTATO AIRE	DRUKSCHAKELAAR LUCHT PRESSOSTATO ARIA	1
0188	6500811700	GASKET (FAN) JOINT VENTILATEUR	DICHTUNG, GEBLASE JUNTA VENTILADOR	DICHTING VENTILATOR GUARNIZIONE VENTILATORE	0
	6500811800	GASKET (FAN) JOINT VENTILATEUR	DICHTUNG, GEBLASE JUNTA VENTILADOR	DICHTING VENTILATOR GUARNIZIONE VENTILATORE	0
0194	64980500	WATER PRESSURE SENSOR CAPTEUR DE PRESSION D'EAU	WASSERDRUCKSENSOR SENSOR DE PRESIÓN DE AGUA	WATERDRUKSENSOR SENSORE PRESSIONE ACQUA	0
0195	64980767	BARB FITTING RACCORD CANNELÉ	BARB-ANSCHLUSS AJUSTE DE PUNTA	BARB MONTAGE RACCORDO A BARBA	0
0201	64980752	GAS VALVE, 500-850mBTU VANNE GAZ	GASVENTIL VÁLVULA DE GAS	GASKLEP VALVOLA GAS	0
0202	64980749	FAN EBM PGT500-600-725 FAN EBM PGT500-600-725	FAN EBM PGT500-600-725 FAN EBM PGT500-600-725	FAN EBM PGT500-600-725 FAN EBM PGT500-600-725	0
	6500812800	FAN Nautilair 8.9 120VAC VENTILATEUR Nautilair 8.9 120VAC	GEBLÄSE Nautilair 8.9 120VAC VENTILADOR Nautilair 8.9 120VAC	BLAZER Nautilair 8.9 120VAC VENTILATORE 8.9 120VAC	0
0203	64980754	ELBOW (GAS SUPPLY LINE) COUDE (ligne d'alimentation en gaz)	ELLENBOGEN (gasversorgungsleitung) CODO (línea de suministro de gas)	ELLEBOOG (GASLOEVOERLEIDING) GOMITO (LINEA ALIMENTAZIONE GAS)	0
	64980826	ELBOW (GAS SUPPLY LINE) COUDE (ligne d'alimentation en gaz)	ELLENBOGEN (gasversorgungsleitung) CODO (línea de suministro de gas)	ELLEBOOG (GASLOEVOERLEIDING) GOMITO (LINEA ALIMENTAZIONE GAS)	0
0204	64980755	FLANGE (GAS VALVE INLET) BRIDE VALVE GAZ	GASVENTILFLANSCH PLETINA VALVULA DE GAS	FLENS GASKLEP 3/4" FLANGIA VALVOLA GAS	0
	64980796	FLANGE (GAS VALVE INLET) BRIDE VALVE GAZ	GASVENTILFLANSCH PLETINA VALVULA DE GAS	FLENS GASKLEP 3/4" FLANGIA VALVOLA GAS	0
0205	64980757	MNPT X FLARE ADAPTER (gas supply line) ADAPTATEUR MNTP	ADAPTER MNTP ADAPTADOR MNTP	ADAPTOR MNTP ADATTATORE MNPT	0
	64980799	MNPT X FLARE ADAPTER (gas supply line) ADAPTATEUR MNTP	ADAPTER MNTP ADAPTADOR MNTP	ADAPTOR MNTP ADATTATORE MNPT	0
0206	64980758	FNPT X FLARE ADAPTER (gas supply line) ADAPTATEUR FNTP	ADAPTER FNTP ADAPTADOR FNTP	ADAPTOR FNTP ADATTATORE FNTP	0
	64980797	FNPT X FLARE ADAPTER (gas supply line) ADAPTATEUR FNTP	ADAPTER FNTP ADAPTADOR FNTP	ADAPTOR FNTP ADATTATORE FNTP	0
0207	64980768	GASKET (SILENCER-VENTURI) JOINT (SILENCIEUX-VENTURI)	DICHTUNG (SCHALLDÄMPFER-VENTURI) JUNTA (SILENCIADOR-VENTURI)	PAKKING (DEMPER-VENTURI) GUARNIZIONE SILENZIATORE-MIXER	0
0211	64980743	LP CONVERSION KIT, 500-600 mBTU KIT DE CONVERSION GPL	LP-UMBAU-KIT KIT DE CONVERSIÓN LP	LP CONVERSIE KIT TRASFORMAZIONE GAS GPL	0

	6XXXXXXX	EN FR	DE ES	NL IT	X
	64980750	VENTURI NG VENTURI GN	VENTURI NG VENTURI GN	VENTURI NG VENTURI MET.	0
	64980795	VENTURI NG VENTURI GN	VENTURI NG VENTURI GN	VENTURI NG VENTURI MET.	0
	64980801	LP CONVERSION KIT KIT DE CONVERSION GPL	LP-UMBAU-KIT KIT DE CONVERSIÓN LP	LP CONVERSIE KIT TRASFORMAZIONE GAS GPL	0
0213	64980763	SILENCER ASSEMBLY SILENCIEUX	SCHALLDAMPFER SILENCIADOR	DEMPER SILENZIATORE	0
0221	64980822	CONDUIT CONNECTOR RACCORD DE CONDUITE	LEITUNGSANSCHLUSS CONECTOR DE CONDUCTO	LEIDING CONNECTOR CONNETTORE CAVO	0
0223	64980760	GAS INLET ADAPTER ADAPTATEUR D'ENTRÉE DE GAZ	GASEINLASSADAPTER ADAPTADOR DE ENTRADA DE GAS	GASINLAAT ADAPTER ADATTATORE INGRESSO GAS	0
	64980823	GAS INLET ADAPTER ADAPTATEUR D'ENTRÉE DE GAZ	GASEINLASSADAPTER ADAPTADOR DE ENTRADA DE GAS	GASINLAAT ADAPTER ADATTATORE INGRESSO GAS	0
0232	64980821	CABLE SOCKET PRISE DE CABLE	KABELBUCHSE TOMA DE CABLES	KABELAANSLUITING PRESA CAVO	0
0250	64980756	FLEX PIPE (GAS SUPPLY LINE) TUYAU FLEX.(ligne d'aliment. en gaz)	FLEXROHR (gasversorgungsleitung) TUBO FLEX.(línea de suminis. de gas)	FLEX LEIDING (GAS TOEVOERLEIDING) TUBO FLESSIBILE (ALIMENTAZ.GAS)	0
	64980794	FLEX PIPE (GAS SUPPLY LINE) TUYAU FLEX.(ligne d'aliment.en gaz)	FLEXROHR (gasversorgungsleitung) TUBO FLEX.(línea de suminis.de gas)	FLEX LEIDING (GAS TOEVOERLEIDING) TUBO FLESSIBILE (alimentazione gas)	0
0271	6500811700	GASKET (FAN) JOINT VENTILATEUR	DICHTUNG, GEBLASE JUNTA VENTILADOR	DICHTING VENTILATOR GUARNIZIONE VENTILATORE	0
	6500811800	GASKET (FAN) JOINT VENTILATEUR	DICHTUNG, GEBLASE JUNTA VENTILADOR	DICHTING VENTILATOR GUARNIZIONE VENTILATORE	0
0272	6000084084	O-RING (BLOWER INLET) JOINT TORIQUE (entrée du ventilateur)	DICHT.O-RING (GEBLASE EINLASS) JUNTA TÓRICA (entrada del ventilador)	O-RING (VENTILATORINLAAT) O-RING INGRESSO VENTILATORE	0
0284	6000084087	GASKET, GAS INLET FLANGE GASKET, GAS INLET FLANGE	GASKET, GAS INLET FLANGE GASKET, GAS INLET FLANGE	GASKET, GAS INLET FLANGE GASKET, GAS INLET FLANGE	0
0286	6500802100	HIGH GAS PRESSURE SWITCH PRESSOSTAT D'AIR	LUFTDRUCKSCHALTER INTERRUPTOR DE PRESIÓN DE AIRE	LUCHTDRUKSCHAKELAAR PRESSOSTATO ARIA	0
0287	64980745	Gas Pressure Switch (LOW) PRESSOSTAT BASSE GAZ	NIEDRIGER GASDRUCKSCHALTER PRESOSTATO DE BAJA GAS	LAGE GASDRUKSCHAKELAAR PRESSOSTATO GAS (MINIMA)	1
0288	64980781	BLEED SCREW (GAS VALVE FLANGE) VIS DE PURGE (bride de soup.de gaz)	ENTLÜFTUNGSSCHR.(gasventilflansch) TORNILLO DE PURGA (brida de la válv.gas)	ONTLUCHTINGSSCHR.(GASKLEPFLENS) VITE DI TENUTA (FLANGIA VALV.GAS)	0
0289	64980759	GAS LINE ASS'Y (GV/MIXER) LIGNE DE GAZ (VANNE GAZ-MÉLANG.)	GASLEITUNGSBAUGRUP.(gasvent.-mischer) LÍNEA DE GAS (válv.de gas-mezclador)	GASLEIDING MONTAGE (GASKLEP-MIXER) LINEA GAS (VALV.GAS-MIXER)	0
	64980792	GAS LINE ASS'Y (GV/MIXER) LIGNE DE GAZ (VANNE GAZ-MÉLANG.)	GASLEITUNGSBAUGRUP.(gasvent.-mischer) LÍNEA DE GAS (válv.de gas-mezclad.)	GASLEIDING MONTAGE (GASKLEP-MIXER) LINEA GAS (VALV.GAS-MIXER)	0
0301	64980747	ELECTRODE (IGNITION) ÉLECTRODE D'ALLUMAGE	ZÜNDELEKTRODE ELECTRODO DE ENCENDIDO	ONTSTEKING ELEKTRODE ELETTRODO ACCENSIONE	0
0309	64980789	FAN PLATE, 500-600mBTU PLAQUE DU VENTILATEUR	LÜFTERPLATTE PLACA VENTILADOR	VENTILATOR PLAAT PIASTRA VENTILATORE	0
	64980808	FAN PLATE, 850 mBTU PLAQUE DU VENTILATEUR	LÜFTERPLATTE PLACA VENTILADOR	VENTILATOR PLAAT PIASTRA VENTILATORE	0
	64980810	FAN PLATE, 725 mBTU PLAQUE DU VENTILATEUR	LÜFTERPLATTE PLACA VENTILADOR	VENTILATOR PLAAT PIASTRA VENTILATORE	0
0310	6500645300	PIONEER REFRACTORY. PGT550 PIONEER REFRACTORY. PGT550	PIONEER REFRACTORY. PGT550 PIONEER REFRACTORY. PGT550	PIONEER REFRACTORY. PGT550 PIONEER REFRACTORY. PGT550	0
	6500645400	PIONEER REFRACTORY. PGT700-850 PIONEER REFRACTORY. PGT700-850	PIONEER REFRACTORY. PGT700-850 PIONEER REFRACTORY. PGT700-850	PIONEER REFRACTORY. PGT700-850 PIONEER REFRACTORY. PGT700-850	0
0314	6500806100	BURNER, 725-850 mBTU BRÛLEUR	BRENNER QUEMADOR	BRANDER BRUCIATORE	0
	6500809300	BURNER BRULEUR	BRENNER QUEMADOR	BRANDER BRUCIATORE	0
0316	64980783	BURNER TOP PLATE, 500-600 mBTU PLAQUE SUPÉRIEURE DU BRÛLEUR	BRANDER BOVENPLAAT PLACA SUPERIOR QUEMADOR	BRANDER BOVENPLAAT PIASTRA SUPERIORE DEL BRUCIATORE	0
	64980806	BURNER TOP PLATE, 725-850 mBTU PLAQUE SUPÉRIEURE DU BRÛLEUR	BRANDER BOVENPLAAT PLACA SUPERIOR QUEMADOR	BRANDER BOVENPLAAT PIASTRA SUPERIORE DEL BRUCIATORE	0
0320	6500811700	GASKET (FAN) JOINT VENTILATEUR	DICHTUNG, GEBLASE JUNTA VENTILADOR	DICHTING VENTILATOR GUARNIZIONE VENTILATORE	0
	6500811800	GASKET (FAN) JOINT VENTILATEUR	DICHTUNG, GEBLASE JUNTA VENTILADOR	DICHTING VENTILATOR GUARNIZIONE VENTILATORE	0
0371	6000087534	GASKET (BURNER), 500-850 mBTU JOINT BRULEUR	DICHTUNG, BRENNER JUNTA QUEMADOR	DICHTING BRANDER GUARNIZIONE BRUCIATORE	0
0372	64980223	GASKET (ELECTRODE) JOINT ELECTRODE	DICHTUNG ELEKTRODE JUNTA ELECTRODO	PAKKING ELECTRODE GUARNIZIONE ELETTRODO	1
0385	6000085641	SIGHT GLASS ASSMBLY VITRE VISEUR DE FLAMME	SCHLAUGLAS CRISTAL LUZ TESTIGO	KIJKGLAS VETRO SPIA COMPLETO	0
0398	64980506	THERMAL SWITCH, TOP PLATE INTERRUPT.THERM., PLAQUE SUPÉR.	THERMOSCHALTER, OBERPLATTE INTERRUP.TÉRMICO, PLACA SUPER.	THERMISCHE SCHAKELAAR, BOVENPLAAT INTERRUTTORE TERM.(PIASTRA BR.)	0
0399	64980507	GASKET, THERMAL SWITCH JOINT D'INTERRUPTEUR THERMIQUE	DICHTUNG, THERMISCHER SCHALTER JUNTA, INTERRUPTOR TÉRMICO	PAKKING, THERMISCHE SCHAKELAAR GUARNIZ., INTER.TERMICO (piastra br.)	0

	6XXXXXXX	EN FR	DE ES	NL IT	X
0412	64980753	FLUE TEST PORT PORT D'ESSAI DE FUMEE	KAMIN-TESTANSCHLUSS PUERTO DE PRUEBA DE HUMOS	ROOKKANAAL TESTPOORT TAPPO PRESA FUMI	0
0415	64980778	PANEL, LEFT SIDE All TFTN PANNEAU LATÉRAL GAUCHE	LINKE SEITENWAND PANEL LATERAL IZQUIERDO	LINKER ZIJPANEEL PANNELLO LATERALE SX	0
0417	64980762	CASE PANEL (FRONT) PANNEAU DE FAÇADE AVANT	MANTEL, VORN PANEL ANTERIOR	VOORPANEEL PANNELLO FRONTALE	0
0418	64980777	PANEL, RIGHT SIDE, All TFTN PANNEAU CÔTÉ DROIT	RECHTE SEITENABDECKUNG PANEL LATERAL DERECHO	RECHTER ZIJPANEEL PANNELLO LATERALE DX	0
0447	6000087500	DOOR LATCH LOQUET DE PORTE	TÜRRIEGEL PESTILLO DE LA PUERTA	DEURSLUITING CHIUSURA PORTA	0
0449	64980505	HMI BEZEL HMI BEZEL	HMI BEZEL HMI BEZEL	HMI BEZEL DISPLAY BEZEL	0
0451	6000084423	RECEPTACLE, 120VAC PRISE, 120 VCA	STECKDOSE, 120VAC RECEPTÁCULO, 120 VCA	RECEPTANG, 120VAC RECEPTACLE, 120VAC	0
0452	64980775	AIR INLET ASSEMBLY COUDE, LAITON, RUE 90, 3/4 in	WINKEL, MESSING, STREET 90, 3/4 zoll CODO, LATÓN, CALLE 90, 3/4 in	ELLEBOOG, MESSING, STRAAT 90, 3/4 in FILTRO INGRESSO ARIA	0
0453	6000084095	PLUG, 7/8 in BLACK DOME PLUG, 7/8 in BLACK DOME	STECKER, 7/8 in SCHWARZER DOM TAPÓN, CÚPULA NEGRA DE 7/8 in	BOUCHON, DÔME NOIR 7/8 in TAPPO, CUPOLA NERA 7/8 in	0
0456	64980776	TOP PANEL PANNEAU DU HAUT	OBERSEITE PANEL SUPERIOR	BOVENSTE PANEEL TOP	0
0468	6008636201	LWCO KIT, FTG LWCO KIT, FTG	LWCO KIT, FTG LWCO KIT, FTG	LWCO KIT, FTG LWCO KIT, FTG	0
0479	64980751	AIR FILTER FILTRE À AIR	LUFTFILTER FILTRO DE AIRE	LUCHTFILTER FILTRO ARIA	0
0481	6000085355	LEG LEVELER PIEDS	FUß PATA	VOETJES PIEDINO REGOLABILE	0
0483	64980786	LEG LEG	LEG LEG	LEG STAFFA APPOGGIO	0
0485	64980761	GROMMET PASSE-FIL	GUMMI JUNTA	DICHTING GOMMINO	0
0801	64980504	PLUG, CONTROL PANEL COVER BOUCHON, COUVERC.DE PANN.DE COMM.	STECKER, BEDIENFELDABDECKUNG TAPÓN, CUBIERTA DE PANEL DE CONTR.	PLUG, BEDIENINGSPANEEL AFDEKKING GOMMINO COPERCHIO PANN.CONTR.	0
0814	64980769	CONTR.PANEL (with harness and pcbs) PANNEAU DE COMM.(avec faisc.et cartes)	BEDIENFELD (mit kabelbaum und pcbs) PANEL DE CONTR.CON ARNÉS Y PCB	BEDIENINGSPAN.(met kabelb.en el.kaarte) PANNELLO DI CONTROLLO	0
0815	64980825	MAIN PCB, ACP CONTROLLER ACP CIRCUIT IMPRIME PRINCIPAL ACP	ELEKTROHAUPTPLATINE ACP CIRCUITO PRINCIPAL ACP	PRINTKAART ACP SCHEDA PRINCIPALE ACP	0
0816	64980468	HMI, TFTN TOUCHSCREEN 7 in HMI, TOUCHSCREEN 7 in	HMI, TOUCHSCREEN 7 in HMI, TOUCHSCREEN 7 in	HMI, TOUCHSCREEN 7 in TOUCHSCREEN 7 in DISPLAY	0
0824	64980770	COVER, CONTROL PANEL COUVERCLE, PANNEAU DE COMM.	ABDECKUNG, BEDIENFELD CUBIERTA, PANEL DE CONTROL	DEKSEL, BEDIENINGSPANEEL COPERCHIO PANNELLO DI CONTR.	0
0840	64980791	RELAY, GAS VALVE RELAIS, SOUPAPE DE GAZ	RELAIS, GASVENTIL RELÉ, VÁLVULA DE GAS	RELAIS, GASKLEP RELÈ VALVOLA GAS	1
0877	64980536	BARRIER, HIGH VOLT FIELD CONNECTION BORNIER HAUTE TENSION	HOCHSPANNUNGSKLEMMENBLOCK BLOQUE DE TERMIN.DE ALTA TENS.	HOOGSPANNING AANSLUITBLOK MORSETTIERA ALTA TENSIONE	1
0878	64980267	GROMMET 1 in OEILLET 1 in	TÜLLE 1 in OJAL 1 in	DOORVOERTULE 1 in GOMMINO 1 in	0
	6500591700	GASKET, HMI AME JOINT, IHM A COUVERCLE AVANT	DICHTUNG, HMI AN FRONTABDECKUNG EMPAQUE, HMI A CUBIERTA DELANT.	PAKKING, HMI NAAR VOORKAP GUARNIZIONE HMI AME	0
0880	64980724	WIRING, GAS VALVE CÂBLAGE, SOUPAPE À GAZ	VERKABELUNG, GASVENTIL CABLEADO, VALVULA DE GAS	BEDRADING, GASKLEP CABLAGGIO VALVOLA GAS	1
	64980725	WIRING, AUX1 PUMP CABLAGE, POMPE AUX1	VERKABELUNG, AUX1-PUMPE CABLEADO, BOMBA AUX1	BEDRADING, AUX1 POMP CABLAGGIO, POMPA AUX1	1
	64980726	WIRING, AUX2 PUMP CABLAGE, POMPE AUX2	VERKABELUNG, AUX2-PUMPE CABLEADO, BOMBA AUX2	BEDRADING, AUX2 POMP CABLAGGIO, POMPA AUX2	1
	64980727	WIRING, AUX2 PUMP/TRANSFOR. CABLE, ALIM.TRANSF.POMPE AUX.	KABEL (zusatzpumpentransf.versorg.) CABLE, TRANSF.BOMBA AUX.	KABEL, AUX POMP TRANSF.VOED CAVI (scheda-trasform.-pompa aux2)	1
	64980728	WIRING, BLWR/VAR PUMP CTRL CÂBLAGE, COMM.DE POMPE VAR	VERKABELUNG, VAR PUMP CTRL CABLEADO, CONTROL BOMBA VAR	BEDRADING, VAR POMP CTRL CABLAGGIO, CTRL POMPA VAR.	1
	64980729	WIRING, DHW PUMP CÂBLE DE POMPE À EAU SANIT.	SANITÄRWASSERPUMPENKABEL CABLE BOMBA AGUA SANITARIA	SANITAIRE WATERPOMPKABEL CAVO POMPA ACQUA SANITARIA	1
	64980730	WIRING, EBUS, FIELD SENSORS CABLE EBUS, CAPTEURS CHAMP	KABEL EBUS, FELDSENSOREN CABLE, EBUS, SENSORES CAMPO	BEDRADING, EBUS, VELDSENSOR CAVI, EBUS, SENSORI AMB.	1
	64980731	WIRING, FLAME SENSOR CÂBLAGE, CAPTEUR DE FLAMME	VERKABELUNG, FLAMMENSENSOR CABLEADO, SENSOR DE LLAMA	BEDRADING, VLAM SENSOR CABLAGGIO, SENSORE FIAMMA	1
	64980732	WIRING, GAS-IGNITER-LWCO CÂBLE GAZ-ALLUMEUR-LWCO	KABEL, GAS-ZÜNDER-LWCO CABLE, GAS-ENCEND.-LWCO	KABEL, GAS-ONTSTEKER-LWCO CABLAGGIO GAS-ACCEND.-LWCO	1
	64980733	WIRING, GND CÂBLAGE, MISE À LA TERRE	VERKABELUNG, MASSE CABLEADO, TIERRA	BEDRADING, AARD CABLAGGIO, TERRA	1
	64980734	WIRING, HMI CÂBLAGE, IHM	KABEL (KESSEL-STROMVERSORGUNG) CABLE DE ALIMENT.DE LA CALDERA	KABEL (STROOMVOORZIENING) CABLAGGIO, HMI	1
	64980735	WIRING, POWER SUPPLY CABLE D'ALIMENTATION	STROMKABEL CABLE DE ALIMENTACIÓN,	STROOMVOORZIENINGSKABEL CAVO ALIMENTAZIONE	1

	6XXXXXXX	EN FR	DE ES	NL IT	X
	64980736	WIRING, WI-FI CÂBLAGE, WI-FI	VERKABELUNG, WI-FI CABLEADO, WI-FI	BEDRADING, WI-FI CAVO WI-FI	1
	64980737	WIRING, WPS, APS, TEMP/SW CÂBLAGE, WPS, APS, TEMP/SW	VERKABELUNG, WPS, APS, TEMP CABLEADO, WPS, APS, TEMP/SW	BEDRADING, WPS, APS, TEMP/S CABLAGGIO, WPS, APS, TEMP/S	1
	64980738	WIRING, ZONE OUTPUTS CÂBLAGE, SORTIES DE ZONE	VERKABELUNG, ZONE-AUSGÄNGE CABLEADO, SALIDAS DE ZONA	BEDRADING, ZONE-UITGANGEN CAVO ALIMENTAZIONE CALDAIA	1
	64980739	WIRING, ZONE SUPPLY CÂBLAGE, ALIMENTAT.DE ZONE	KABEL, ZONENVERSORGUNG CABLE DE ALIMENT.DE LA CALDERA	BEDRADING, ZONE VOEDING CABLAGGIO ALIMENT.ZONE	1
0881	65111933	CONNECTOR 2P CONNECTEUR 2 POLES	STECKER 2 POL. RAST 5 CONECTOR 2P	STEKKER 2-POLIG CONNETTORE 2 POLI	5
0882	64980476	FUSE, 2A, 32V, PLUG STYLE FUSIBLE, 2A, 32V, TYPE FICHE	SICHERUNG, 2 A, 32 V, STECKERART FUSIBLE, 2A, 32V, TIPO ENCHUFE	ZEKERING, 2A, 32V, STEKKER STIJL FUSIBILE, 2A, 32V, PLUG STYLE	0
	64980478	FUSE, 5A, ZONE PUMPS FUSIBLE, 5A, POMPES DE ZONE	SICHERUNG, 5A, ZONENPUMPEN FUSIBLE, 5A, BOMBAS DE ZONA	ZEKERING, 5A, ZONEPOMPEN FUSIBILE, 5A, POMPE DI ZONA	0
	64980479	FUSE, 6.3A, MAIN PCB, ACP FUSIBLE, 6,3A, CARTE PRINC., ACP	SICHERUNG, 6,3A, HAUPTPLATINE, ACP FUSIBLE, 6,3A, PCB PRINCIPAL, ACP	ZEKERING, 6,3A, HOOFDPCB, ACP FUSIBILE, 6,3A, SCHEDA PRINCIPALE	0
	64980480	FUSE, 2A, ZONE CONTROLLER, C3Z FUSIBLE, 2A, CONTRÔL.DE ZONE, C3Z	SICHERUNG, 2A, ZONE CONTROL., C3Z FUSIBLE, 2A, CONTROL.DE ZONA, C3Z	ZEKERING, 2A, ZONE-CONTROLLER, C3Z FUSIBILE, 2A, SCHEDA GEST.ZONE, C3Z	0
0887	64980471	TRANSFORMER 24V, 40VA TRANSFORMATEUR 24V, 40VA	TRANSFORMATOR 24V, 40VA TRANSFORMADOR 24V, 40VA	TRANSFORMATOR 24V, 40VA TRASFORMATORE 24V, 40VA	1
0888	64980475	PCB, LOW VOLTAGE CONNECTION PCB, BORNE BASSE TENSION	LEITERPLATTE (niederspannungsanschluss) PCB, BORNE BASSE TENSION	PCB, LAGE VOLTAGE-AANSLUITING SCHEDA CONNES.BASSO VOLTAG.	0
0889	6500801400	PCB, 3-ZONE CONTROLLER CCI, CONTRÔLEUR 3 ZONES	PCB, 3-ZONEN-REGLER PCB, CONTROLADOR DE 3 ZONAS	PCB, 3-ZONE-CONTROLLER SCHEDA GESTIONE 3 ZONE	0
0890	64980477	FUSES HOLDER PORTE FUSIBLE	SICHERUNGSHALTER PORTAFUSIBLE	ZEKERINGHOUDER PORTAFUSIBILE	1
0891	64980526	WIRING GROMMET (45 mm) GUIDE-CABLE EN GOMME 45 mm	GUMMI-KABELFÜHRUNG, 45 mm GOMA GUIA CABLE 45 mm	KABELGELEIDING RUBBER 45 mm GOMMINO PASSACAVI 45 mm	1
0892	64980723	COVER, HIGH VOLTAGE BARRIER COUVERCLE DE BORN.HAUTE TENS.	ABDECKUNG (hochspannungsklemmleiste) CUBIERTA BLOQUE DE TERM.ALTA TENS.	HOOGSPANNING KLEMMENBLOKDEKSEL COPERCHIO MORSET.ALTA TENSIONE	1
0893	64980525	BRACKET, FUSE HOLDER SUPPORT, PORTE FUSIBLE	HALTER, SICHERUNGSHALTER SOPORTE, PORTAFUSIBLE	SUPPORT, PORTE FUSIBLE STAFFA PORTAFUSIBILI	1
0894	65111934-01	CONNECTOR 3P (x5) CONNECTEUR 3 POLES (x5)	STECKER 3-POLIG (x5) CONECTOR 3P (x5)	STEKKER 3-POLIG (x5) CONNETTORE 3 POLI (x5)	1
0895	6000085970	ROCKER SWITCH ROCKER SWITCH	ROCKER SWITCH ROCKER SWITCH	ROCKER SWITCH ROCKER SWITCH	0
0896	64980784	COVER, FIELD WIRING COUVERCLE DE LA PARTIE CÂBLAGE	ABDECKUNG DES VERKABELUNGSTEILS CUBIERTA DE LA PARTE DE CABLEADO	DEKSEL VAN HET BEDRADINGSONDERD. COPERCHIO PARTE CABLAGGI	0
0897	64980527	SPARE FUSE KIT (2 EACH) SPARE FUSE KIT (2 EACH)	SPARE FUSE KIT (2 EACH) SPARE FUSE KIT (2 EACH)	SPARE FUSE KIT (2 EACH) KIT FUSIBILI RICAMBIO (2 CIASCUNO)	0
0898	64980503	GASKET, HMI TO FRONT COVER JOINT, IHM A COUVERCLE AVANT	DICHTUNG, HMI AN FRONTABDECKUNG EMPAQUE, HMI A CUBIERTA DELANT.	PAKKING, HMI NAAR VOORKAP GUARNIZIONE HMI	0
0899	6000087558	RELAY (pump, omron, isolat.30A 120Vac) RELAY (pompe, omron, isol.30A 120Vac)	RELAY (omron, isolation 30A 120Vac) RELAY (omron, isolation 30A 120Vac)	RELAY (omron, isolation 30A 120Vac) RELAY (omron, isolation 30A 120Vac)	0
5001	64980743	LP CONVERSION KIT, 500-600 mBTU KIT DE CONVERSION GPL	LP-UMBAU-KIT KIT DE CONVERSIÓN LP	LP CONVERSIE KIT TRASFORMAZIONE GAS GPL	0
	64980801	LP CONVERSION KIT, 725-850 mBTU KIT DE CONVERSION GPL	LP-UMBAU-KIT KIT DE CONVERSIÓN LP	LP CONVERSIE KIT TRASFORMAZIONE GAS GPL	0
5002	64980218	OUTDOOR SENSOR SONDE EXTERIEURE FILAIRE	AUSSENFUEHLER SONDA EXTERNA CON CABLES	BUITENVOELER SONDA ESTERNA CON CAVI	1
5003	6000084088	RELIEF VALVE3-4M X1FM,50 PSI RELIEF VALVE3-4M X1FM,50 PSI	RELIEF VALVE3-4M X1FM,50 PSI RELIEF VALVE3-4M X1FM,50 PSI	RELIEF VALVE3-4M X1FM,50 PSI RELIEF VALVE3-4M X1FM,50 PSI	0
5010	6000086804	TRIDICATOR 80PSI, 250F, TRX-FTX TRIDICATOR 80PSI, 250F, TRX-FTX	TRIDICATOR 80PSI, 250F, TRX-FTX TRIDICATOR 80PSI, 250F, TRX-FTX	TRIDICATOR 80PSI, 250F, TRX-FTX TRIDICATOR 80PSI, 250F, TRX-FTX	0
5022	64980740	INSTALLATION KIT BOX KIT D'INSTALLATION	INSTALLATIONSKIT-BOX JUEGO DE INSTALACIÓN	INSTALLATIEKIT KIT INSTALLAZIONE	0
	64980798	INSTALLATION KIT BOX KIT D'INSTALLATION	INSTALLATIONSKIT-BOX JUEGO DE INSTALACIÓN	INSTALLATIEKIT KIT INSTALLAZIONE	0
5025	6000086234	VENT SCREEN (6.5 stainless steel mesh) VENT SCREEN (6.5 stainless steel mesh)	VENT SCREEN (6.5 stainl.steel mesh) VENT SCREEN (6.5 stainl.steel mesh)	VENT SCREEN (6.5 stainless steel mesh) VENT SCREEN (6.5 stainless steel mesh)	0
	64980212	ROUND MESH, VENT SCREEN (3.375 in) MAILLE RONDE (écran d'évent 3.375 in)	RUNDES MESH (entlüft.sbildsch.3,375 in) MALLA RED. (pantalla de vent.3,375 in)	RONDE MESH, VENT-SCHERM (3.375 in) PROTEZIONE SCARICO FUMI (3,375 in)	0
5031	6000083008	DECAL, GAS VENT DIRECTLY BELOW GAS VENT DIRECTLY BELOW DECAL,	GAS VENT DIRECTLY BELOW DECAL, GAS VENT DIRECTLY BELOW DECAL,	GAS VENT DIRECTLY BELOW DECAL, GAS VENT DIRECTLY BELOW DECAL,	0
5032	64980742	CONDENSATE DRAIN TUBE TUBE D'ÉVACUAT.DES CONDENSATS	KONDENSAT-ABFLUSSROHR TUBO DE DRENAJE DE CONDENS.	CONDENSAFVOERBUIS TUBO SCARICO CONDENSA	0
5040	6000086233	VENT SCREEN (4.375 stainless steel mesh) VENT SCREEN (4.375 stainless steel mesh)	VENT SCREEN (4.375 stainless steel mesh) VENT SCREEN (4.375 stainless steel mesh)	VENT SCREEN (4.375 stainless steel mesh) VENT SCREEN (4.375 stainless steel mesh)	0
5044	6000084010	SENSOR, SYSTEM PIPE SENSOR SENSOR, SYSTEM PIPE SENSOR	SENSOR, SYSTEM PIPE SENSOR SENSOR, SYSTEM PIPE SENSOR	SENSOR, SYSTEM PIPE SENSOR SENSOR, SYSTEM PIPE SENSOR	0
5045	64980741	CONNECTOR TUBING TUBE DE CONNECTEUR	ANSCHLUSSROHR CONNECTOR TUBING	CONNECTORBUIS CONNETTORE TUBI	0

	6XXXXXXX	EN FR	DE ES	NL IT	X
5048	6000084025	MANUAL SHUTOFF VALVE, 1" F NPT MANUAL SHUTOFF VALVE LX600-800	MANUAL SHUTOFF VALVE LX600-800 MANUAL SHUTOFF VALVE LX600-800	MANUAL SHUTOFF VALVE LX600-800 MANUAL SHUTOFF VALVE LX600-800	0
	6000085312	MANUAL SHUTOFF VALVE FTG1.2-1.4 IN. ROBINET GAZ FTG1.2-1.4 POUCES	GASHAHN FTG1.2-1.4 ZOLL GRIFO DE GAS FTG1.2-1.4 PULGADAS	GASKOGELKLEP FTG1.2-1.4 INCHES RUBINETTO GAS FTG1.2-1.4 POLLICI	0
5049	6000085316	THERMAL COMPOUND TASSERON 10PK THERMAL COMPOUND TASSERON 10PK	THERMAL COMPOUND TASSERON 10PK THERMAL COMPOUND TASSERON 10PK	THERMAL COMPOUND TASSERON 10PK THERMAL COMPOUND TASSERON 10PK	0
5061	64980744	4" CPVC TUBE EN PLASTIQUE	ABGASROHR (CPVC) TUBO DE HUMOS CPVC	FLUE PIPE (POLYPROPYLENE) TUBO SCARICO FUMI CPVC)	0
	64980800	6" CPVC TUBE EN PLASTIQUE	ABGASROHR (CPVC) TUBO DE HUMOS CPVC	FLUE PIPE (POLYPROPYLENE) TUBO SCARICO FUMI CPVC)	0
5062	6000083718	HOSE CLAMP 11-16-1 1-2 HOSE CLAMP 11-16-1 1-2	HOSE CLAMP 11-16-1 1-2 HOSE CLAMP 11-16-1 1-2	HOSE CLAMP 11-16-1 1-2 HOSE CLAMP 11-16-1 1-2	0

IDENTIFICATION PLATE

SERIAL NUMBER

16 Characters : 21 03 31 20 XX 153101

- 21 — Fixed reference
- 03 — Month of manufacture
- 31 — Day of manufacture
- 20 — Year of manufacture
- 153101 — Sequencial number

21 Characters : 3675007 XX 07 070 0000315

- 3675007 — Product reference
- 07 — Year of manufacture
- 070 — Manufacturing day
- 0000315 — Sequencial number

The indications mentionned on the prices, commercial or technical literature and the scheme are written for your guidance and are available at a given time. The CONSTRUCTOR retains the power to modify the presentation, the form, the size, the conception or the material of the products.